Preprint of https://doi.org/10.1016/j.esd.2020.07.005

Technical paradigms in electricity supply for irrigation pumps: Case of Maharashtra, India

Priya Jadhav, Namita Sawant, Athira Madhusudhana Panicker

Centre for Technology Alternatives for Rural Areas, IIT Bombay, Mumbai, India
Corresponding Author. Tel: (+91) 8879257291, E-mail: jadhav_priya@iitb.ac.in

Abstract: Solar photovoltaics are being promoted in various parts of the developing world for irrigation pumps as a clean energy source, for use in remote areas, to provide livelihood generation, and in India, additionally to address issues with grid supply. India has a well-developed system of electricity distribution for irrigation, but socio-political issues in this sector have led to a system with poor quality supply for farmers, and losses for distribution utilities. A technical solution is being sought through the following new paradigms: offgrid solar photovoltaic pumps, grid-connected solar photovoltaic pumps, agricultural solar feeders, and High Voltage Distribution Systems (HVDS). We evaluate these paradigms considering Maharashtra, a representative state with an agricultural distribution infrastructure similar to many of the southern and western states. We consider the energy consumption of five agricultural feeders, representing four main agro-climatic zones of Maharashtra. We conduct a comparison of systems based on the seasonality of irrigation, sizes of pumps, and areal density of connections as reflected in the cost of infrastructure, using an ALCC (Annualized Life Cycle Costing) method by using marginal costs for supply of electricity. Based on our results we address each of the stated pros and cons of these technologies which cover economic, environmental, and social issues. Offgrid solar PV pumps are more cost effective than grid connected pumps under certain conditions. Other than that most systems are more likely to be suboptimal in comparison to upgrading the current grid based distribution system.

Keywords: *Solar photovoltaic pumps; Irrigation; grid electricity; net-metered pumps; groundwater;*

1. Introduction

Energized irrigation is a central part of the water-energy-food debate which touches upon the basic needs of humanity. Energy for irrigation is closely tied to the United Nations' Sustainable Development Goals relating to poverty reduction, food, clean energy, water, reduced inequality, income generation and employment [1]. In many developing nations, the agriculture sector is key to providing a decent life to its citizens [2–4]. Diesel and grid based electricity have been used as energy sources for irrigation to varying extents in these countries [4–6]. The presence of solar photovoltaic (SPV) pumps has been on the rise since the 2000s following a drop in the price of solar PV panels.

The suitability or appropriateness of these energy sources can be debated depending on various local and global factors such as clean energy, access to supply, cost, and energy security of a nation and effect on groundwater. Considering the cost, energy security, and environmental repercussions, diesel usage eventually needs to, and is expected to, shift to either SPV pumps or grid connected pumps. Hence it is important to compare these two options. While several comparisons have already been done, there is none that takes a system-wide perspective focusing on the marginal cost of the system.

Closas and Rap [7] compares SPV pumps with electric and diesel pumps in general terms at a global level, considering the high upfront cost, capacity, and repercussions on groundwater, but does not consider the impact of seasonality, hours of pumping, nor areal load density. Gupta[8] does an econometric study of the impact of adoption of SPV pumps in Rajasthan over diesel and electric pumps on water, energy usage, food production and income. No system costs were considered, with the

analysis being done from the farmers' point of view taking subsidized costs and tariffs. Senol [9] has compared diesel, mobile multi-user SPV and stationary single-user SPV for a 0.5 ha apple orchard in Turkey by finding the lifecycle cost of each option using discounted cash flow analysis. Sarkar [10] compares solar PV, Solar PV–diesel generator-battery system, and diesel pumps for Bangladesh. While seasonal irrigation is considered, there is no comparison with grid supply even though Bangladesh has a well-developed grid distribution system. The paper talks of grid based supply being fossil fuel based, but the possibility of grid connected renewable energy has not been taken into account. Bassi [11] compares diesel and SPV pumps conducting a financial analysis for 200 hours of pumping. Purohit [12] does a financial analysis of various renewable energy technologies for irrigation water pumping and compares them to diesel and electric pumps. A capacity utilization factor based on the availability of the renewable energy source such as 0.2 for solar PV pumps, has been considered, but seasonality of irrigation has not. Narvarte et al [13] compares the real costs of irrigating from a community well in Alicante Spain using a 20 kW SPV pump with a grid based pump using the grid supply tariff in the comparison not system costs.

A techno-economic comparison of power supply technologies for irrigation pumps needs to take into account infrastructure cost, fuel cost, maintenance cost, and environmental effects. For a financial comparison of electric or grid connected supply, and SPV supply, this entails factoring in seasonality of irrigation, size of pumps, and areal density of pumps. The last we have not considered directly but instead used the infrastructure costs of grid irrigation incurred by the utility in the geographical area of case study. The first order environmental effects that need to be considered are carbon emissions, and the effect on groundwater. There are several electricity supply configurations within the two broad categories of grid connected pumps and SPV pumps, such as net-metered SPV, offgrid SPV, High Voltage Distribution System (HVDS) and some others. We address the gap in literature by developing a framework to compare these various configurations taking the aforementioned factors into consideration.

The paper is structured as follows. In section 1 we introduce the study and make a case for it considering the gap in literature. In section 2 we describe the context in India explaining the reasons it is a good case for this framework. In section 3 we list the various arguments that have been made in favour of, and against, these configurations by implementing agencies, civil society organizations, and in academic literature. In section 4 we discuss the relevance of the state of Maharashtra for this study, and the methodology for the analysis. In section 5 we state our assumptions, conduct the analysis and discuss results. In section 6 we conclude.

2. Background

India is an interesting case study for such a comparison for the following reasons.

Firstly the country has a largely well-developed electric grid with some variations across states. There are 146 million land holdings with 55% of the population involved in agriculture [14], using 15.6 million electrified pumps [15] and 5.5 million diesel pumps [16]. 18% of the total electricity consumption or 0.2 million GWh [17], and 3.3% of total diesel consumption or 69 MTonnes [18,19], is used in irrigation pumps.

Secondly, since the 1970s, the government of India and many state governments have placed much importance in electrification for agricultural pumping. Over the years, agricultural electricity has settled into a low equilibrium characterised by subsidized tariffs, poor collection rates and loss-making for distributions companies (DISCOM), and poor quality of electricity supply and service to farmers [20,21]. Vote bank politics or flat rate tariffs are accepted as the triggers that have led to this state [22,23].

Preprint of https://doi.org/10.1016/j.esd.2020.07.005

To address some of these issues, agricultural feeder separation was carried out in 2003 in Gujarat. This was a major infrastructural change, where pumps, and other loads, were respectively connected to two separate sets of distribution wires[24]. Separated agricultural feeders, hereafter referred to as Ag feeders, allowed limiting hours of power to agricultural pumps, while still servicing other consumers for 24 hours a day thereby limiting losses to DISCOMs. Thereafter many states followed suit including Maharashtra, Karnataka, Andhra Pradesh, Tamil Nadu, Punjab, Haryana, and Madhya Pradesh. While this step did address some issues, the situation is still far from desirable. To deal with existing problems, states are resorting to other types of electricity supply configurations: High Voltage Distribution System (HVDS), Solar Agricultural feeders, Net-metered SPV pumps, and Offgrid SPV pumps [25–30].

An aggressive push for SPV pumps is being made through the National Solar Mission, a program introduced by the government in 2010 to promote the use of SPV in various configurations such as grid connected solar PV plants, net-metered rooftop systems, offgrid systems in rural areas, and irrigation pumps. The scheme has a target to install 1.75 million SPV pumps, and to solarise 1 million grid connected pumps by 2022 [31]. 0.24 million pumps have been installed under this scheme until March 2019.

The seeming shift in focus to SPV pumps from a grid-based system makes it interesting to develop a framework for the comparison of the technologies. There is also enough data available for usage parameters like hours of pumping, and costs for the various grid connected and SPV technologies being considered.

3. Current implementations and commentary on the alternative systems

In this section we analyse the benefits of these systems expressed in literature, reports and government documents. A brief description of the systems, schematic shown in figure 1, is given in the Appendix A.1.

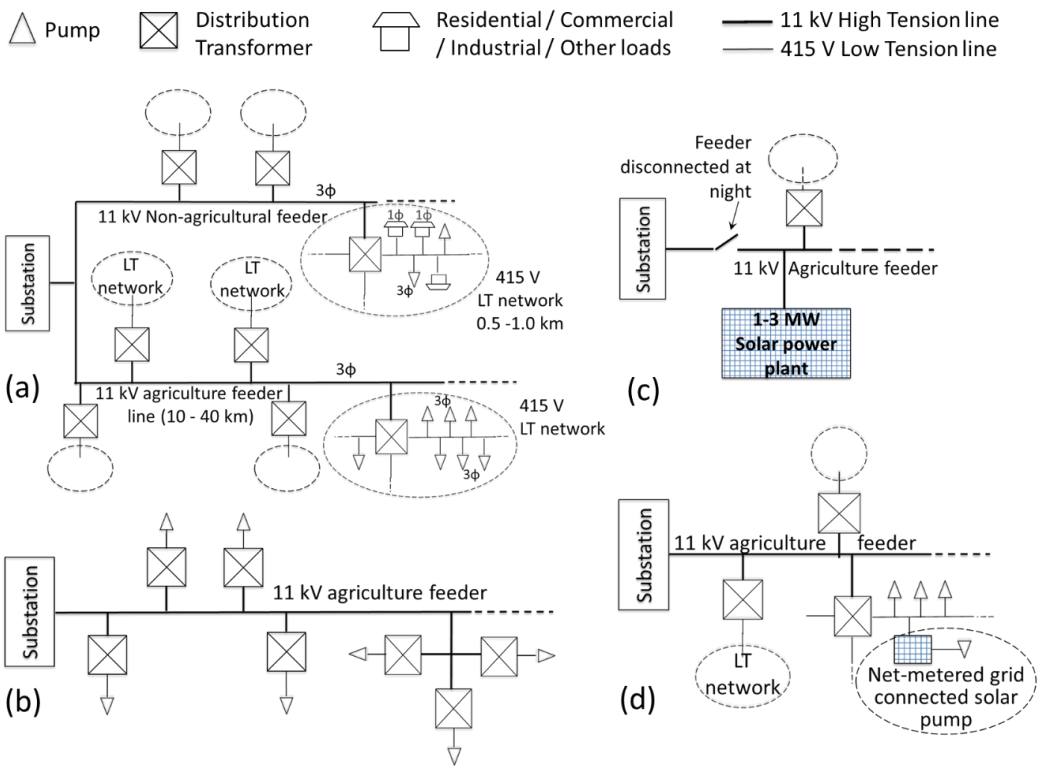

Figure 1. Schematics of (a) Ag feeder (b) HVDS (c) Solar Ag feeder (d) Net-metered solar pump

Preprint of https://doi.org/10.1016/j.esd.2020.07.005

HVDS (fig. 1b) is expected to reduce theft, resistive losses, and Distribution Transformer (DT) breakdowns, and result in better voltage for farmers – i.e., address many of the problems associated with the current Ag feeders. To this end the Andhra Pradesh government has been converting Ag feeders, and implementing HVDS since 2006. Much of it has been accomplished through funding from sources such as the World Bank, and JICA [32,33]. A more cost-effective ways to achieve the technical improvements may be to design Ag feeders with fewer consumers per DT.

The Maharashtra Government Resolution of May 2018 states that the 225,000 applications which are listed as pending on March 2018 will be connected using HVDS with the aim of providing better service to the consumer [29]. The GR also says that feelings of ownership of a DT will ensure that the legally connected farmers' prevent theft on the short LT lines. This argument could be confounded by poor metering, flat rate tariffs, or high subsidies, which is the norm in most states in India.

Solar Ag feeders (fig. 1c) were introduced in a Government Resolution by the Government of Maharashtra [30]. According to this Government Resolution, MW scale SPV plants will be connected to agricultural feeders at the 11 kV level and hence reduce dependency on conventional energy purchased from the generation companies thereby reducing losses to the utility generally associated with agricultural supply. Advantages that have been stated by Prayas Energy Group**[34]** are reliable day time supply, ease of scalability, no capital subsidies, and a saving of $652,000 per feeder over a period of 20 years over the current system of Ag feeders. 'No capital subsidies' and 'ease of scalability' refers to the fact that private generators set up the SPV plants and can do it one feeder at a time. All of these arguments miss the fungible nature of grid-connected power generation, i.e., a grid connected SPV plant at any location could achieve all of the advantages mentioned as a locally connected plant.

On this basis we question the methodology used by Prayas Energy Group to arrive at the purported savings. They consider the power purchase cost from the Solar Ag feeders to be at a lower rate than the Average Power Purchase Cost (APPC) borne by the DISCOM, even though the APPC encompasses all other grid connected solar PV plants [35]. In addition, agricultural power is supplied at night 4 days out of 7. Hence the cost of grid power to agriculture should be considered as lower than the APPC, since demand is lower at night.

More importantly, a substantial amount of land, approximately 6 ha per feeder, is required for the solar PV plant close enough to the feeder. Use of government land where available has been proposed. This may be a suboptimal use of the land, and if the plants are set up by independent project developers supply rates could be higher considering the geographical restrictions.

The only savings possible are the reduced transmission charges and losses. However, since irrigation is extremely seasonal, a substantial part of the generated energy will be fed back to the grid. These transmission effects have not been accounted for by Prayas Energy Group.

Net-metered SPV pumps (fig. 1d)are said to be useful because they could provide the following: (a) Water–saving incentive (b) Additional income for farmers (c) Reduce the subsidy burden on DISCOMs (d) Reliable day time supply (e) Reduce Transmission and Distribution losses (f) Reduced carbon emissions [25,26]. The Government of Karnataka has commissioned a net-metered pumps pilot project of 310 pumps to reduce energy drawl from the grid and provide an additional income to farmers [36]. We consider the quantified examples from [25,26], below.

Shah and Verma [25] makes the following hypothetical assumptions about electric pumps operating in South and Western India: 1500 hours of pumping of a 6.5 kW grid connected pump, and expected 40% reduction in water drawl and hours of pumping in the move from a grid connected pump to a Net-metered SPV pump. The reduction in 40% in water drawl is possible when farmers move from furrow to drip irrigation, and is on the higher side of water savings assuming watering efficiencies of

~60% and ~90% for the two methods respectively. They also assume a reduction in energy bill proportional to the water savings. They have omitted to account for an additional head of 25m required in drip irrigation which results in an increase in energy required to pump a litre of water. And if the water sources are surface sources such as tanks and irrigation canals, the total energy consumption per unit cropped area may in fact increase [37,38]. The cost of the drip irrigation system to the farmer, which is ~$1740/ha, has not been considered. After taking these factors into consideration, it is unclear if net-metered pumps result in any financial incentive to save water for the farmer.

Shah et al. [26] present a case study of 6 pumps connected in a net-metered cooperative scheme, of 56.4 kW capacity, in Gujarat. There is no economic comparison to grid electricity. The effects of reduction in groundwater exploitation is only an expected effect with no analysis of what crop choices farmers could be incentivized to make to reduce water consumption and yet benefit financially. Annual financial benefits for the DISCOM have been over-estimated by at least 22% since that the power purchased from the cooperative scheme is considered eligible for Renewable Energy Certificates (REC) for the purchaser, the DISCOM. But according to Central Electricity Regulatory Commission rules, power purchased at a price greater than the APPC of the DISCOM cannot be considered for REC. The feed in tariff in their calculations is greater than the same as cost to serve, which is definitely greater than the APPC, since cost to serve is the sum of APPC, operational costs, and infrastructure costs. **Offgrid SPV pumps** have been proposed as an antidote to the problems associated with grid electricity **i**n India, Bangladesh and Mozambique[8,10,25,39–42], and as a more cost-effective option than the electric grid in Spain [13]. To the extent that economics are considered in these cases, it is the tariff or cost to the farmers that has been considered but not the system cost.

Several states in India have introduced heavily subsidized offgrid solar pumps schemes with a view to reduce the stress on the grid distribution system and to reduce carbon emissions. Yet, there is no study that compares offgrid solar pumps to grid based systems economically considering key factors such as seasonality of usage, landholding sizes and size of pumps. Besides the economics, the reduction in carbon emissions due to use of offgrid pumps too depends on the capacity utilization factor of the pump which depends on the seasonality of irrigation, as pointed out by Bassi [11].

Others have discussed specific cases of particular crops or system design [43,44]. Durga et al.[27] discuss the solar PV pumps scheme in Bihar, and asserts that irrigation services would be a better provision for small-holder farmers. Except for remote locations, if all farmers in a region are expected to be provisioned with irrigation pumps without capture by a few farmers, then a comparison to a grid based system is necessary.

4. Methodology

We consider Maharashtra to be good context for this analysis because agro-climatic conditions in Maharashtra are similar to most of the Deccan plateau. It has hard rock aquifers, as do the states of Tamil Nadu, Andhra Pradesh, Madhya Pradesh, and Karnataka. Gujarat is a combination of alluvium and hard rock [45]. Pump sizes in Maharashtra are commonly between 3 HP and 10 HP. This is different from the states of the Indo-Gangetic basin such as Punjab and Haryana with alluvial aquifers. Farmers in these states commonly use large pumps of the order of 25 to 60 HP.

The other reason that makes Maharashtra a good case study is, that it has a well-developed grid infrastructure unlike the states of Bihar and Uttar Pradesh. Yet the state government is also experimenting with all the other configurations which have been stated in the previous section, except for net-metered solar pumps. Hence we have a large enough set of cost and outcomes data.

Maharashtra has 4.2 million agricultural grid connections, out of which 3.5 million are connected to 10,500 separated Ag feeders [46]. The number of operational land holdings is 14.7 million, with an

average area of 1.35 ha per holding [14]. Irrigated area is 4.2 million ha [47]. Hence average land holdings of grid connected farmers is estimated to be ~1 ha.

4.1 Framework development

We conduct a basic financial cost-benefits analysis of the 5 configurations by finding the Annualized Lifecycle Cost (ALCC) of each, while taking into account: (1) quantum of energy drawn from or supplied to the grid- dependent on seasonality and hours of irrigation (2) the infrastructure cost – average costs in Maharashtra (3) cost of energy - dependent on time of supply (4) various energy losses – dependent on the configuration type (5) operations and maintenance costs. After calculating the ALCC, we take into account other effects discussed earlier such as groundwater draft, carbon emissions, and, theft and losses.

To provide context of seasonal variations, energy consumption, hours of pumping etc., we document the energy consumption pattern of five feeders in four different agro-climatic zones of Maharashtra. This gives us contextual values for (1).

We find the ALCC for annual hours of pumping varying from 0 to 2800 hours for a 5 HP pump. 5 HP is the commonest as well as the average size used in Maharashtra [35]. For (2), (3) (4) and (5), we use data from documents published by the Maharashtra Electricity Regulatory Commission (MERC), GRs, cost data from Maharashtra State Electricity Distribution Co. Ltd. (MSEDCL) the public sector DISCOM operating in Maharashtra, calculations based on feeder structures taken from the field, and data from literature.

4.2 Seasonality of irrigation and annual variation in energy use in Maharashtra

We consider 5 administrative divisions (figure 2) that are distinguished broadly by agro-climatic and social differences. Social and agricultural differences are interlinked and have developed together historically [48]. Western Maharashtra is dominated by sugarcane, a water intensive perennial crop, fed by river water. Vidarbha and Marathwada are dominated by kharif crops due to low groundwater availability in the rabi season and few surface water resources. Out of the four districts in Khandesh, Nasik and Jalgaon have high concentrations of horticultural crops and use perennial irrigation. Konkan has very little energized irrigation owing to a lack of groundwater due to its geology, and hence we leave it out of our analysis. In fact there are no Ag feeders in Konkan because of the low demand for agricultural connections. While there are many variations within these divisions, we select feeders which are representative of the broad trends mentioned above.

Preprint of https://doi.org/10.1016/j.esd.2020.07.005

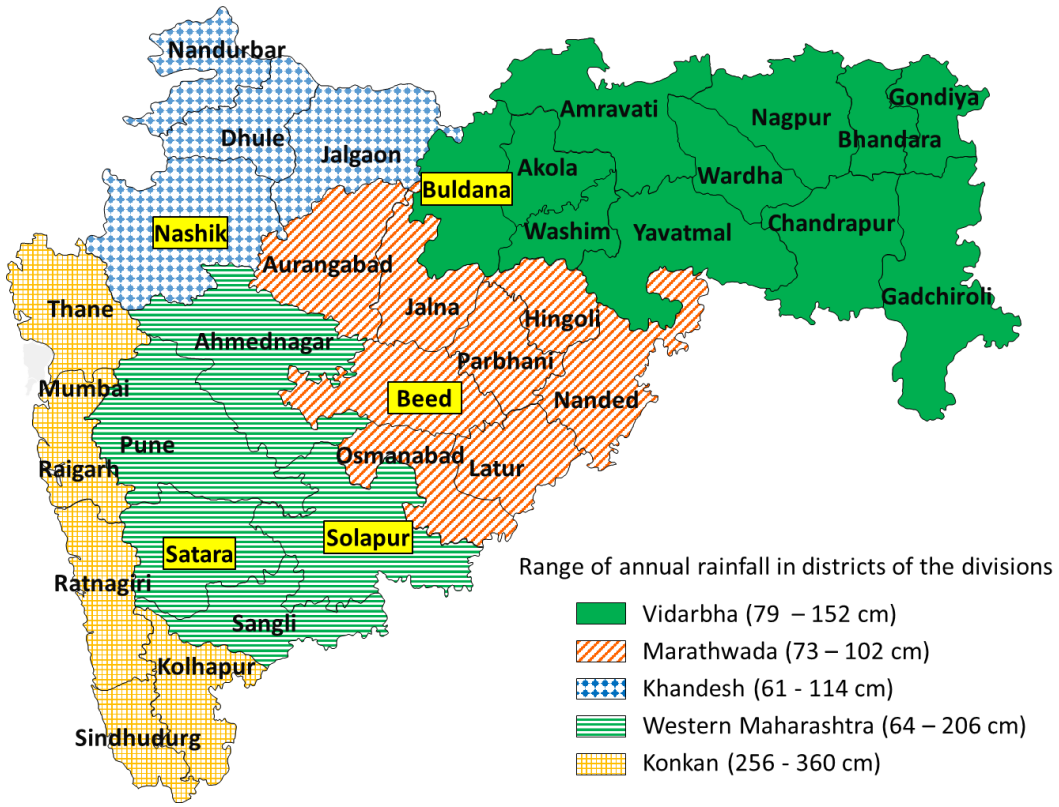

Figure 2. Five divisions of Maharashtra; Representative feeders are from the boxed districts

Figure 3 shows the monthly energy consumption on 5 agricultural feeders over one year from the districts of Nasik, Satara, Buldhana, Beed and Solapur. These 5 feeders are representative of the cropping in the four regions mentioned above. Solapur is in Western Maharashtra and borders Marathwada. The drought-prone nature of the district results in a cropping pattern that is closer to Marathwada, rather than the intense sugarcane cropping dominant in Western Maharashtra. We have selected the Solapur feeder because it exhibits a slightly different characteristic from all other feeders.

Preprint of https://doi.org/10.1016/j.esd.2020.07.005

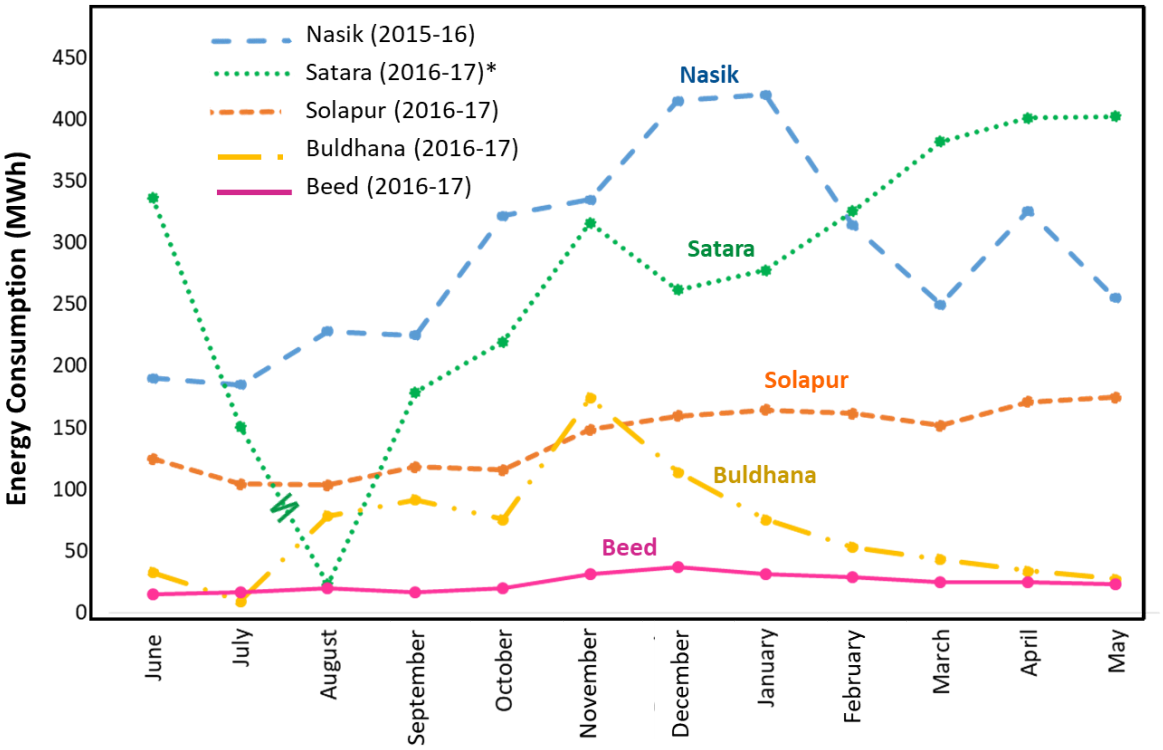

Figure 3. Monthly energy consumption over a year on 5 agricultural feeders (** Satara feeder data is from August 2016 – July 2017) [Source: Collected from registers maintained in the respective distribution substations]*

Basic agricultural details of the area covered by the 5 feeders is given in Table 1. We refer to these feeders by their districts in the rest of the paper.

Table 1. Characteristics of the agricultural area covered by the 5 representative feeders

District	**Nasik**	**Satara**	**Solapur**	**Buldhana**	**Beed**
Feeder	Old Dawachwadi	Vijaynagar	Mangalwedha	Alasana	Walunj
Village(s)	Kumbhari, Panchkeshwar	Jihe, Phadtarwadi, Vijaynagar, Malwadi, Angapur, Kathapur	Khomnal, Mangalwedha	Alasana, Kherda, Ghoulkhed, Takali (viro), Takali (hat)	Walunj, Tavalwadi
Block	Niphad	Satara	Mangalwedha	Shegaon	Ashti
Water sources	Well Borewells Farm ponds Canal	River Wells	Wells Borewells	Wells Borewells	Wells Borewells
Crops	Grapes, Maize, Soybean, Groundnut	Sugarcane, Soybean, Sorghum	Sugarcane, Sorghum, Wheat, Gram	Soybean, Cotton, Gram, Wheat, Pigeon Pea	Black Gram, Mung, Pearl Millet, Cotton, Pigeon Pea, Sorghum, Gram ,Wheat

Preprint of https://doi.org/10.1016/j.esd.2020.07.005

4.3 Hours of pumping and size of equivalent solar PV pumping systems

We find the average hours of pumping on the 5 feeders using the feeder configuration details listed in Table 2. The annual energy consumption, connected load, and number of farmers in columns 1 and 2 were collected for each feeder from the respective subdivision office or from the head office of the distribution company MSEDCL. Column 3 is the average HP rating of a pump on the feeder. For the Beed feeder, we do not have access to the total connected load, but a survey of 32 farmers on the feeder indicates an average connected load of 4.4 HP.

Table 2. Energy consumption, loading, and hours of pumping on the 5 representative feeders

	(1) Annual energy consumption on feeder (MWh)	(2) Connected load (HP) (No. of connections)	(3) Average connected load (HP)	(4) Annual hours of pumping	(5) Excess energy generated by 5 HP Solar PV pump (%)
Satara	3276	1622(280)	5.8	1726	41%
Nasik	3465	2966 (382)	7.8	998	66%
Solapur	1697	3573 (752)	4.8	406	86%
Buldhana	810	2169 (465)	4.7	319	89%
Beed	288	- (220)	4.4	254	91%

The annual hours of pumping in column 4 has been calculated as follows. Connected load in kW is calculated assuming 75% motor efficiency as per standards,[49] using the following formulae:

$$Connected\ load\ (kW) = \frac{Connected\ load\ (HP)^{*}\ 0.746}{Efficiency\ of\ motor} \qquad ---------- (i)$$

Assuming a distribution loss of 15% on the feeder:

$$Annual\ Hours\ of\ pumping\ = \frac{Annual\ Energy\ consumption\ on\ the\ feeder^{*}0.85\ (kWh)}{Connected\ load\ (kW)} \qquad ----- (ii)$$

We are conducting our comparison for 5 HP grid connected pumps, but we need to find the equivalent solar PV pump size. We can safely assume that to ensure timely irrigation a farmer will desire a hydraulic output from an SPV pump at least as much as a typical grid connected pump, so we conduct a general comparison of the performance of grid based pumps being used, and the standard set for SPV pumps. While many grid based pumps which are available in the market do not adhere to standards, SPV pumps are generally purchased through government schemes and hence are expected to follow standards.

We only consider AC SPV pumps since they are more commonly used than DC pumps and are also cheaper. DC pumps are ~20% more expensive than AC pumps and deliver ~10% more output for the same HP rating [50,51]. According to the Ministry of New and Renewable Energy (MNRE) standards, AC solar PV pumps should have a daily minimum hydraulic output of 900 kg-m / W_p [50]. In addition, as per the standards the kW rating of the SPV panel is equal to, or slightly less than, the HP rating of the pump. For example a 5 HP pump must have a 4.8 kW connected panel. Hence the daily hydraulic output of a 5HP pump must be 4320 x 10^3 kg-m.

Now considering a 5 HP grid connected pump as example, from (*i*) we know that the input power to a 5HP pump is approximately 5 kW. Hence its efficiency, if it exhibits the same hydraulic output as a 5 HP AC SPV pump, can be stated as:

$$Efficiency(\%) = \frac{Daily\ (hydraulic) output\ energy}{Daily\ input\ (electrical\ ) energy} = \frac{4800\ W \times 900\ kg-m \times 9.8\ m/s^2}{5000\ W \times 8\ hr \times 3600\ s/hr} = 30\% \qquad (iii)$$

The number of hours of pumping in (*i*) have been taken as 8 since agricultural feeders get 8 – 10 hours of power supply each day. Efficiency measurements in the field have shown grid pumps operating at efficiencies of 25% to 40%. Hence we can assume that an AC SPV pump and grid pump of the same HP rating have the same approximate output on average.

Column (5) lists the % excess unused energy generated by the solar PV panels by the average pump configuration for each feeder. This is calculated using Eq.(*iv*). The excess energy from net-metered solar PV pumps is fed back onto the grid and affects their ALCC.

$$\%\ Excess\ Energy\ generated = \frac{Energy\ generated - Energy\ consumption}{Energy\ generated} \times 100 \qquad (iv)$$

5. Results and Discussion

Figure 4 shows the ALCC computed for the various configurations as a function of hours of pumping.

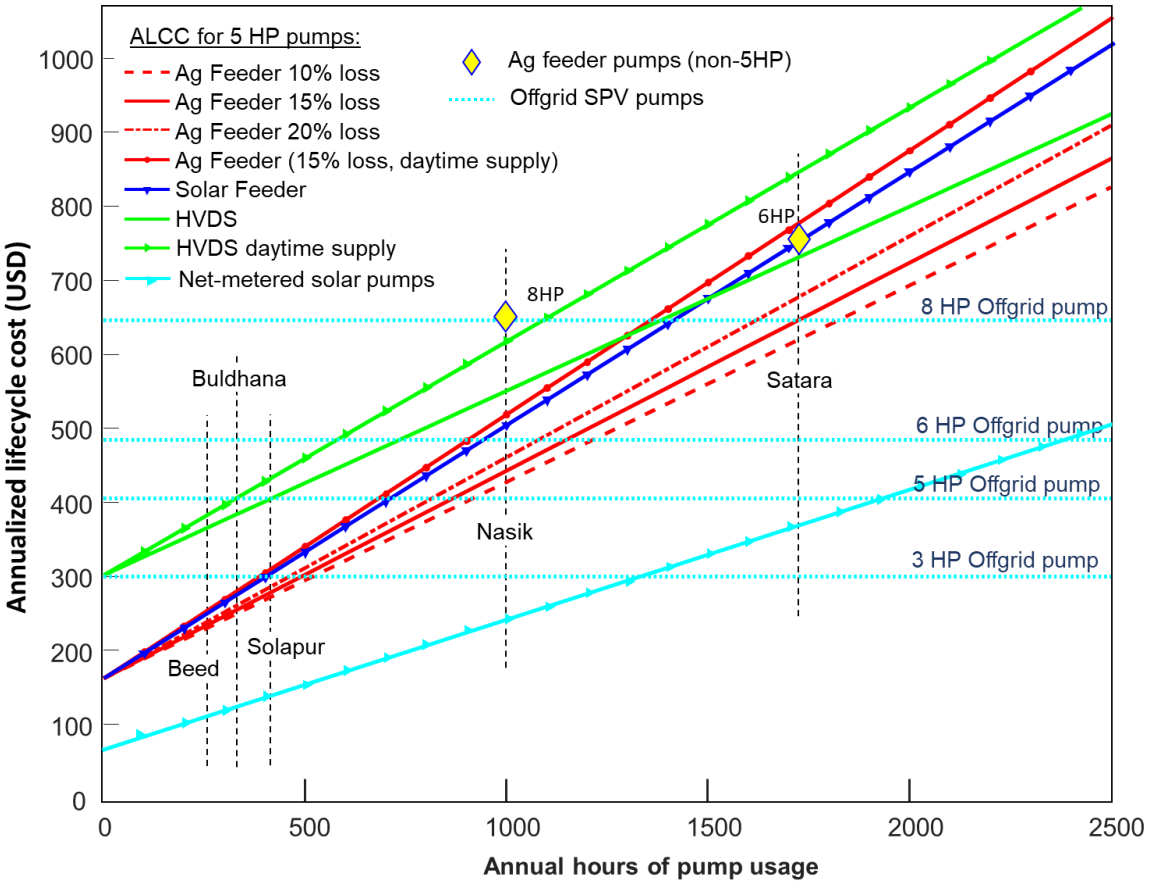

Figure 4. Variation of ALCC with hours of pumping as a function of the different configurations. The yellow diamonds indicate the ALCC for 8HP and 6HP pumps respectively for 998 and 1726 hours of pumping. The vertical dashed lines are a guide to the eye indicating the hours of pumping for the 5 cases considered.

The assumptions used to calculate the ALCC are summarized in Table 3. Explanations on what data we have used to find the infrastructure, operations and maintenance, and energy costs, are given in Appendix A.2. While all the grid connected systems have been analysed considering a 5HP pump size, we have also computed the ALCC for Ag feeders with 15% loss considering 8HP and 6HP pumps for the

Nasik and Satara cases respectively, since those are the average size of the pumps being used in those two cases unlike the other feeders where the average is ~ 5HP.

Table 3. Assumptions made in ALCC calculations

Energy costs (¢ / kWh)

Energy cost in grid supply	5.86	[a]
Energy cost adjusted for Time of Day	4.61	[h]
Feed-in Tariff for Solar PV	3.97	
Transmission charges	0.54	[a]

Losses:

Transmission loss	4%	[a]
Distribution loss - technical	10-20%	[f,g]
Distribution loss - technical in HVDS	4%	[f,g]

Capital and maintenance cost ($, USD):

Ag feeder (per 5HP pump)	1449	[b]
HVDS (per 5HP pump)	3623	[c]
Electric pump (per 5HP pump)	290	
Solar offgrid pumps (1HP-7.5HP)	1740-7101	[e]
Solar net-metered pumps	Offgrid+725	[d]
Maintenance cost of solar offgrid pump	1%	
Operational expenses for grid ($/year/pump)	41	[a]

Lifetime (years), and other assumptions:

Inflation (Avg. over last 8 years)	6.8%	[j]
Discount factor for Solar PV systems	12%	
Average Daily Solar Resource (kWh/m^2)	7.15	
Lifetime of solar PV systems	20	
Lifetime of Distribution Transformers	25	[i]
Lifetime of conductors	40	[l,k]
Lifetime of grid-connected pumps	10	

[a][35] , [b] [46], [c] [52], [d][53], [e] [51], [f] [54], [g][55], [h] [56], [l] [57], [j] [58], [k][59]

The abscissa on the vertical axis is indicative of the infrastructure and maintenance component in the ALCC. It is $162 for Ag feeders, and solar Ag feeders, and $300 for HVDS. For the net-metered SPV pumps, the abscissa does not have such a direct meaning. The slopes correspond to the cost of energy delivered per hour to the pump. For the offgrid solar pump, ALCC stays the same for all hours of pumping since there is no energy cost. For the systems that do not use solar pumps, ALCC increases in the order of Ag feeder, solar Ag feeder, Ag feeder with daytime supply, HVDS, and HVDS with daytime supply, until about 1300 hours of pumping. Between 1300 and 2100 hours, HVDS is lower than Ag feeder with daytime supply. Beyond 2100 hours, HVDS dips below even the solar Ag feeder. The Ag feeder with daytime supply is slightly higher than the solar Ag feeder because in our analysis transmission losses have been taken as zero for the solar Ag feeder. In reality the transmission losses may not be zero, but will be lower than for the Ag feeder. We discuss this in the context of locational value later in this section.

The net-metered SPV pumps seem to be the most cost-effective option for all the feeders. However this configuration has some complications like rooftop systems all over the world, and is quite impractical considering the complexities of agricultural supply in India.

We now discuss the ALCC and the other outcomes for each of the configurations in detail.

HVDS

Technically HVDS is supposed to be a better system since it reduces voltage drops, resistive losses and DT failure. The same benefits can be achieved in Ag feeders by having fewer connections than the current norm of 25 – 30 pumps per DT, splitting up specific problematic low tension networks by adding additional DTs. If we reduce the number of pumps connected on a DT from 25 to 15, the ALCC would increase by ~$30/pump. This is much lower than the ALCC increase of $80 -$125 per pump due to HVDS. The actual costs of HVDS implementation may be higher, since what we have are only the maximum acceptable cost. Promoting the use of capacitors, a simple intervention that costs $2.50-

6.50 per farmer, could reduce DT breakdown substantially and improve voltage somewhat. In the Indian context, HVDS is expected to reduce theft through hooking by minimizing the length of LT lines. In addition, it is expected that the legally connected farmers will feel more ownership of a DT if there are only 1 -3 consumers per DT and hence not allow theft. But this will work only if there is in fact proper metering, billing, and collection. 68% consumers in Maharashtra are of the category to be billed on the basis of meters and 32% of the category to be billed on a flat rate [35]. Table 4 shows metering status for 193 farmers on four feeders chosen randomly from four subdivisions in four districts of Maharashtra, collected by the authors as part of a separate study. According to this data only 43% of the metered category of consumers have working meters, heavily skewed due to the Sangli feeder. The lack of credible metering, the large dues of agricultural consumers, and periodic waivers of these dues by the government, do not support the argument regarding ownership.

Table 4. Status of metering on sample set of connections

Feeder Name, District	No. of consumers surveyed	Metered category of consumers	Split up of Metered category			Consumers w/o working meters marked as Normal on bill
			Working meters	Meters absent	Meters not working	
Nehru Nagar, Solapur	78	52	19	18	15	18
Khed, Sangli	63	40	29	8	3	5
Kodri Ag, Buldhana	9	9	2	6	1	5
Ambegaon, Nanded	43	14		14		14

The reasons for theft are discussed under the Ag feeders discussion at the end of this section.

Solar Ag feeders

As expected solar Ag feeders have a higher ALCC than Ag feeders due to the higher cost of daytime power. It is slightly lower than Ag feeders with daytime supply because of the omission of 4% transmission losses for solar Ag feeders. However we need to consider the actual locational value provided by distributed generation: because a generation source is nearby, doesn't mean it will reduces transmission costs and bottlenecks [60]. For example, the Solapur, Buldhana and Beed feeders in this configuration would generate 90% excess energy over the year. Usage is not heavy in these regions even in peak season. Comparatively, the loading due to generated solar energy will be heavy in the lean season due to most pumps not drawing energy. Since all nearby feeders will follow the same seasonal pattern, it may result in transmission bottlenecks in the lean irrigation season thus raising system costs. The final effect can only be determined through a more detailed analysis.

For solar Ag feeders, the solar power plants are located close to the feeder, connecting at the 11 kV level. Each substation may have 3-8 agricultural feeders, with a solar power requirement of ~3MW per feeder[30]. With a land requirement of 2 ha per MW for solar plants, the total land required is ~ 18 to 48 ha per substation. This geographical constraint, and the small scale of the plants, has led to higher costs as expected [60–63]. A bidding process conducted in the state for 2 MW to 10 MW plants in 21 districts totalling 1172 MW in 2019, has resulted in a discovered feed-in tariff of 4.8 ¢/kWh [64], which is 20% higher than the feed-in tariff of 4.0 ¢/kWh found the same year in Maharashtra for 50 MW to 300 MW plants totalling 1900 MW [53]. It would be more cost-effective to add large utility scale solar PV plants to the grid without location constraints, and supply daytime power to farmers.

Net-metered solar pumps

We see that the computed the ALCC is very low for the net-metered solar pump when we consider the feed-in tariff applicable to large-scale solar PV power producers. However, the economics of such distributed energy resources (DER) where consumers are also energy producers is complex and determining cost-reflective tariffs is a challenge.[60,65,66] Some examples of why this is a problem are discussed below.

In general grid based energy has an advantage over locally generated solar energy and other renewable energy sources in that it is firm power, unlike most renewable energy which is infirm or dependent on the vagaries of the natural resource. Effectively, the reason it is possible for a farmer or any rooftop SPV consumer to reduce his costs by using a net-metered SPV system is because the firm power on the grid allows the absorption of the solar energy produced when the farmer is not using it. Another way that net-metered systems are cross-subsidized by grid energy users, is that fixed costs like network and regulatory costs are partly included in the per unit cost. For example, transmission charge of 0.54 ¢/kWh is added on as a volumetric charge and not a fixed charge even though the transmission capacity is fixed and based more on peak power transfer and not energy usage. This volumetric charge is then going to increase for non-DER users since the number of units being drawn from the transmission system are going to decrease because of DER users. For these reasons, we need to be careful about the relevance of ALCC in the net-metering configuration.

We now analyse with quantification, the reasons for promotion of net-metered pumps stated in section 3.

(a) Water-saving incentive

One way that water saving can be achieved is by moving to micro-irrigation. Moving from furrow to drip irrigation cuts down water requirement by 1/3, but due to a higher pressure head requirement of 25m, it increases energy consumption per litre of water. It can also increase the total energy consumption if the original head *h* was less than 50m, because the reduction in water usage does not make up for the per litre increase in energy consumption. See Equations *i – iii*.

$$E_{furrow} = m \times g \times h \qquad \text{- } (i)$$

$$E_{drip} = \left(m \times \frac{60}{90}\right) \times g \times (h + 25) \qquad \text{- } (ii)$$

$$\frac{E_{furrow}}{E_{drip}} = \frac{m \times g \times h}{\left(m \times \frac{60}{90}\right) \times g \times (h + 25)} = \frac{h}{\frac{60}{90} \times (h + 25)} = \frac{3}{2} \frac{h}{(h + 25)} \qquad \text{- - -} (iii)$$

Hence, moving to micro-irrigation may not always result in energy savings, and certainly not proportional to water savings. So the combination of net-metering and micro-irrigation may not result in additional income. It is also not clear that farmers over-water their crops, and hence can be prompted to be frugal under net-metering schemes. But we make some estimates here.

For our five sample feeders, we have estimated an energy consumption between 1070 kWh and 10000 kWh by the net-metered pumps. Assuming 10-20% over-watering, a farmer can save up to 2000 kWh of energy per year by using water frugally. If excess electricity is purchased at a rate of 3.97 ¢/kWh (feed-in tariff from Table 3), farmers can earn at most $40 - $80 per year. To understand what this means consider the capital cost of the micro-irrigation system at $1729/ha, cultivation cost and profit of $1703/ha and $1086/ha respectively, for sugarcane one of the more water intensive crops [67]. At these orders of magnitude of costs and profit, and considering the various constraints farmers operate under, it is not certain if there is enough of an incentive for farmers to save water. Expecting a move to

less water-intensive crops seems unlikely, considering that the most water-intensive cultivators using a 5 HP pumps, can earn at most $500 annually by cutting down on all irrigation.

Theoretical studies have suggested the use of metering in grid pumps to promote water savings [68,69]. Yet case studies have shown that financial incentives need not lead to water saving by farmers. A change from flat rate tariffs to metered tariffs in Bengal reduced pump owners incentive to sell water, because they had only cared about covering their electricity bills and not additional earnings [70]. A study in Gujarat, that used financial incentives to farmers to save water, had no impact on its usage [71].

(b) Additional income for farmers

In our five cases, farmers earn between $45 for the smallest pump (Beed, 1 HP) to $145 for the largest pump (Satara, 5 HP) from a net-metering tariff. Most solar PV pumps schemes are highly subsidized with farmers having to pay 5% - 10% of the cost in the Maharashtra schemes. Hence the government is investing at least $2870 and $7011 in these two pumps, and as a result saving $53 and $169 from an alternative energy source such as a utility scale grid connected SPV plant, and also generating the aforementioned income for the farmers, thus resulting in Internal Rates of Return (IRR) of 4% and 5%. There is also the risk of capital investment in systems distributed over the country side, and the transactional costs in a country where agricultural metering is mostly poor or non-existent.

It should be noted that the calculations for irrigation are done for a daily solar resource of 7.15 kWh/m^2 which is possible in most parts of India for systems where the East-West angle of the solar panels is changed three times a day. This feature is a part of the MNRE requirements, and is generally available in government specified schemes through a manual lever. We consider it unlikely that farmers will change the settings when not using the pumps, since often the distance between homes and fields is of the order of kilometers. If they do change it, earnings can go up to $65 and $208 in these cases which still does not change the IRR much.

Some have called this an insurance scheme for farmers that combines the promotion of green energy and provides an additional income source for farmers [72]. There are 146 million landholdings in India, and 22 million minor irrigation schemes [14,16]. The scheme will be limited to approximately 15% farmers who have an irrigation source and are willing to invest in the subsidized pumps cost of ~$160 -$390.

In many parts of the world, solar PV on farmland is being looked as a way to maximize land use [73–76]. That is a model that operates at a different scale of solar PV plants than net-metered pumps, and we do not consider that model here.

(c) Reducing the subsidy burden on DISCOMs

A large part of the agricultural subsidy is paid by the government, and the DISCOM is also a public sector enterprise owned by the government. Any solar PV scheme being subsidized by the government is only a re-allocation of funds. We see that the actual ALCC is lower than Ag feeders only for the Satara case, and that comes with the caveat discussed at the start of the section.

(d) Reliable daytime supply, (e) Reduced Transmission and Distribution losses, and, (f) Reduced carbon emissions: the discussion about these expected benefits are the same as for the Solar Ag feeders case.

Offgrid solar pumps

Among our cases we find that for the Solapur, Beed and Buldhana cases, the 5 HP offgrid solar pump is almost twice as expensive as the default Ag feeder configuration, while for the Nasik and Satara cases,

it is more cost-effective. This is as expected since sugarcane and grape, the dominant crops on the Satara and Nasik feeders respectively, require year round irrigation, whereas the dominant crops in the other three regions are dependent on water sources that are largely available a for few months after the monsoons. Hence the regions of Western Maharashtra which have a substantial portion of land under sugarcane, and farmers growing plantation horticulture crops across the state could be suitable candidates for SPV pumps.

These crops are often grown using drip irrigation, and drip and SPV pumps have one complexity which we have not addressed in our analysis and must be noted. Unlike grid based pumps which generate a constant flow-rate for a certain head, SPV pumps have a variable flow-rate over the day because of the variation in input power. But since drip systems allow only a small range of variation in flow-rate, often an overhead tank is used along with SPV pumps to maintain the required pressure and flow-rate in the drippers. The tank needs to be ~25 m high, adding extra cost and maintenance issues. A second option is to overdesign the SPV system so that it meets the required flow over a day, thus raising the cost. There are other more complex ways of maximizing output, such as changing the number of drippers or area being supplied over the day.

Overdraft of groundwater is an oft quoted downside of offgrid pumps because there is no marginal cost to pumping in an SPV pump as opposed to electric or diesel pumps [7,25]. The effects of cheap or non-existent marginal cost to pumping groundwater is seemingly already visible in India through electricity subsidies for agriculture [22]. Yet, how the use of SPV pumps instead of electrical pumps with unsubsidized tariffs effects overdraft has not been studied enough. Also, if the livelihoods of farmers is to be kept at the forefront, then the reduction in groundwater draft needs to be done through other policy instruments, not by making irrigation more expensive.

Considering emissions of 0.82 kg CO_2/kWh from the power sector in India [77], and an energy payback time for SPV panels of 1.5 years [78], it is possible to get a reduction between 19 and 130 tonnes of CO_2 emissions over 20 years for our 5 cases.

A 2017 Maharashtra government scheme distributing 3 HP to 7.5 HP solar PV pumps to farmers owning less than 4 ha of land provides a good crucible to test the reaction of farmers to solar offgrid pumps when a grid option is available. The scheme came with an 85 – 95% subsidy, subject to the condition that farmers relinquish their right to a grid connection for ten years. It was found that this condition along with a few other reasons resulted in a poor response with only 5700 pumps being sold against the original target of 10,000[28]. Farmers were worried about the safety of such an expensive system in the field, an observation also made by Closas and Rap [7]. Farmers were also concerned about maintenance issues in the new technology. Several of the farmers who responded to the scheme were in fact richer farmers who found a work-around to the grid connection rule, for whom this was an additional pump. Beneficiaries were quite happy with the solar PV pumps.

Ag Feeders

Except for offgrid SPV pumps under certain conditions, we see that most proposed systems may not live up to the purported benefits, and improvement of the current system of Ag feeders is techno-economically the best option. We consider the current problems of Ag feeders and possible solutions.

Most of the existing technical problems of Ag feeders have been addressed in the section on HVDS. The problem of theft can at least partly be attributed to unmet demand because of the long wait times of more than a year for a new connection[79]. The problem of low collection rates will exist in any grid

based option. The current solar PV pumps schemes are all highly subsidized and hence the expenditure is no less.

The political nature of the issues of agricultural electricity supply are also triggers for experimenting with alternatives. We take a brief look at the political issues.

All electricity distribution utilities operating in rural India are public sector companies, with agricultural electricity consumption being mostly subsidized by state governments but not completely. As a result the utilities do suffer some financial burden because of agricultural electricity supply. Agriculture electricity distribution is not expected to be a profit-making enterprise, yet these utilities are expected to function as profitable entities and are incentivized by the regulator to reduce losses. The move towards offgrid SPV pumps could be interpreted as a response to moving a lossy public distribution system to privately owned systems. An additional motivation is the target set in the National Solar Mission.

However, it is also understood that utilities in the country present inflated consumption in the agricultural sector [80], seemingly using the high consumption and losses as a reason to excuse poor service to farmers. Better metering and transparency in agricultural electricity usage can result in a realistic picture and bring formalization to processes in the sector, potentially leading to better outcomes for farmers.

Considering the 4.2 million grid connected pumps in the state (15.6 million in the country), with 0.10 – 0.15 million connections added on every year, improving the operation on Ag feeders seems to be the best solution.

6. Conclusion

We developed a framework to compare various agricultural electricity supply configurations for irrigation and calculated the ALCC for each. On the basis of these results we analysed the stated advantages and disadvantages of SPV and grid based pumping systems and their effects on carbon emissions, groundwater overdraft, power quality supply, theft and financial viability. While the exact ALCC numbers depend on the assumptions which may vary, the trends and the methodology brings clarity to the debate on choice of technologies in the sector.

7. Acknowledgements

Part of the feeder energy data used in this work has been collected by students Pankaj Sharma, and Akanksha Doval under the author's guidance. The metering data is collected in a project done in collaboration with Rajarambapu Institute of Technology, Islampur, Nagesh Karajagi Orchid College of Engineering and Technology, Mauli Group of Institutions' College of Engineering & Technology, Shegaon, Shri Guru Gobind Singhji Institute of Engineering and Technology, Nanded. This research did not receive any specific grant from funding agencies in the public, commercial, or not-for-profit sectors.

8. References

[1] Mashnik D, Jacobus H, Barghouth A, Jiayu Wang E, Blanchard J, Shelby R. Increasing productivity through irrigation: Problems and solutions implemented in Africa and Asia. Sustainable Energy Technologies and Assessments 2017;22:220–7. https://doi.org/10.1016/j.seta.2017.02.005.

[2] Ozturk I. The dynamic relationship between agricultural sustainability and foodenergy- water poverty in a panel of selected Sub-Saharan African Countries. Energy Policy 2017;107:289–99.

[3] Djanibekova U, Gaur V. Nexus of energy use, agricultural production, employment and incomes among rural households in Uttar Pradesh, India. Energy Policy 2018;113:439–53.

[4] Sarkar MdNI, Sifat AI, Rahim N, Reza SMS. Replacing Diesel Irrigation Pumps with Solar Photovoltaic Pumps for Sustainable Irrigation in Bangladesh: A Feasibility Study with HOMER , Anwarul Islam Sifat, Nazmul Rahim, and S. M. Shamim Reza. Proceedings of International Conference on Electrical Information and Communication Technology 2015.
[5] Gul A, Rida F, Aw-Hassan A, Bu¨yu¨kalaca O. Economic analysis of energy use in groundwater irrigation of dry areas: a case study in Syria. Applied Energy 2005;82:285–299.
[6] Mukherji A. The energy-irrigation nexus and its impact on groundwater markets in eastern Indo-Gangetic basin: Evidence from West Bengal, India. Energy Policy 2007;35.
[7] Closas A, Rap E. Solar-based groundwater pumping for irrigation: Sustainability, policies, and limitations. Energy Policy 2017;104:33–7.
[8] Gupta E. The impact of solar water pumps on energy-water-food nexus: Evidence from Rajasthan, India. Energy Policy 2019;129:598–596.
[9] Senol R. An analysis of solar energy and irrigation systems in Turkey. Energy Policy 2012;47:478–86. https://doi.org/10.1016/j.enpol.2012.05.049.
[10] Sarkar MdNI, Ghosh HR. Techno-economic analysis and challenges of solar powered pumps dissemination in Bangladesh. Sustainable Energy Technologies and Assessments 2017;20:33–46. https://doi.org/10.1016/j.seta.2017.02.013.
[11] Bassi N. Solarizing groundwater irrigation in India: a growing debate. International Journal of Water Resources Development 2018;34:132–45.
[12] Purohit P. Financial evaluation of renewable energy technologies for irrigation water pumping in India. Energy Policy 2007;35:3134–3144.
[13] Narvarte L, Fernández-Ramos J, Martínez-Moreno F, Carrasco LM, Almeida RH, Carrêlo IB. Solutions for adapting photovoltaics to large power irrigation systems for agriculture. Sustainable Energy Technologies and Assessments 2018;29:119–30. https://doi.org/10.1016/j.seta.2018.07.004.
[14] Ag. Agricultural Census 2015-16, Phase – I, Provisional Results. Department of Agriculture, Government of India; 2015.
[15] Annual Pumpset Energisation Report 2018. New Delhi, India: Central Electricity Authority, Government of India; 2019.
[16] 5th Census of the Minor Irrigation Schemes report. New Delhi, India: Minor Irrigation (Statistics Wing), Ministry of Water Resources, River Development and Ganga Rejuvenation, Government of India; 2017.
[17] MOSPI. Energy Statistics, Central Statistics Office, Ministry of Statistics and Programme Implementation, Government of India. 2019.
[18] Nielsen. All India Study on Sectoral Demand of Diesel & Petrol. Petroleum Planning and Analysis Cell, Ministry of Petroleum & Natural Gas, Government of India; 2013.
[19] MOSPI. Energy Statistics, Central Statistics Office, Ministry of Statistics and Programme Implementation, Government of India. 2015.
[20] Kimmich C. Incentives for energy-efficient irrigation: Empirical evidence of technology adoption in Andhra Pradesh, India. Energy for Sustainable Development 2013;17:261–9. https://doi.org/10.1016/j.esd.2013.02.004.
[21] Sant G, Dixit S. Agricultural pumping efficiency in India: the role of standards. Energy for Sustainable Development 1996;3:29–37. https://doi.org/10.1016/S0973-0826(08)60178-7.
[22] K Dubash N. The electricity-groundwater conundrum: Case for a Political Solution to a Political Problem. EPW 2007;42:45–55.
[23] Shah T, Giordano, Mark. Irrigation Institutions in a Dynamic Economy: What Is China Doing Differently from India? Economic & Political Weekly 2004;XXXIX:3452-3462.
[24] Shah T, Bhatt S, Shah RK, Talati J. Groundwater governance through electricity supply management: Assessing an innovative intervention in Gujarat, western India. Agricultural Water Management 2008;95:1233–42. https://doi.org/10.1016/j.agwat.2008.04.006.

[25] Shah T, Verma, Shilp. Karnataka's Smart, New Solar Pump Policy for Irrigation. Economic & Political Weekly 2014;XLIX:10–5.
[26] Shah T, Durga, Neha, Prakash Rai, Gyan, Verma, Shilp, Rathod, Rahul. Promoting Solar Power as a Remunerative Crop. Economic & Political Weekly 2017;L11:14–9. https://doi.org/10.1016/j.agwat.2008.04.006.
[27] Durga N, Verma S, Gupta N, Kiran R, Pathak A. Can solar pumps energize Bihar's agriculture? IWMI-Tata Water Policy Program; 2016.
[28] Sawant N, Sharma P, Jadhav P. SOLAR PHOTOVOLTAIC PUMPS FOR IRRIGATION IN MAHARASHTRA – APPROPRIATE SIZING. Mumbai, India: Centre for Technology Alternatives for Rural Areas, IIT Bombay; 2018.
[29] Government Resolution No. UVP-2018/S.No.30/Energy-5. Government of Maharashtra. (English translation at: https://www.ctara.iitb.ac.in/en/system/files/GR_HVDS_English.pdf) n.d.
[30] Government Resolution No. SaurPra-2016/S.No.354/Energy-7. Government of Maharashtra. (English translation at: https://www.ctara.iitb.ac.in/en/system/files/GR_solar_feeders_English.pdf) n.d.
[31] Annual Report 2018-19. Ministry of New and Renewable Energy, Government of India; 2018.
[32] APEPDCL. Environment and Social Management Plan for Rural HVDS Project. Andhra Pradesh: Eastern Power Distribution Company of Andhra Pradesh Ltd.; 2016.
[33] AP. Power for All. Government of India and Government of Andhra Pradesh; 2016.
[34] PEG 2018, Gambhir A, Dixit S. Solar Agriculture Feeders, Prayas Energy Group 2018.
[35] Case No. 195 of 2017, 'Revised Projections of Aggregate Revenue Requirement (ARR) for 2019-20', Order, Maharashtra Electricity Regulatory Commission 2018.
[36] BESCOM. Ongoing DSM Projects 2019. https://bescom.org/wenexa-project-details/.
[37] Sanchis-Ibor C, García-Mollá M, Avellà-Reus L. Effects of drip irrigation promotion policies on water use and irrigation costs in Valencia, Spain. Water Policy 2017;19:165–80. https://doi.org/10.2166/wp.2016.025.
[38] Jackson TM, Khan S, Hafeez M. A comparative analysis of water application and energy consumption at the irrigated field level. Agricultural Water Management 2010;97:1477–85. https://doi.org/10.1016/j.agwat.2010.04.013.
[39] Narale PD, Rathore NS, Kothari S. Study of Solar PV Water Pumping System for Irrigation of Horticulture Crops. International Journal of Engineering Science Invention 2013;2.
[40] IRENA. Solar pumping for irrigation: Improving livelihoods and sustainability. International Renewable Energy Agency; 2016.
[41] Tewari NP. Solar Irrigation Pumps The Rajasthan Experience. IWMI-Tata Water Policy Program; 2012.
[42] Chilundo RJ, Neves D, Mahanjane US. Photovoltaic water pumping systems for horticultural crops irrigation: Advancements and opportunities towards a green energy strategy for Mozambique. Sustainable Energy Technologies and Assessments 2019;33:61–8. https://doi.org/10.1016/j.seta.2019.03.004.
[43] López-Luque R, Reca J, Martínez J. Optimal design of a standalone direct pumping photovoltaic system for deficit irrigation of olive orchards. Applied Energy 2015;149:13–23. https://doi.org/10.1016/j.apenergy.2015.03.107.
[44] Khan SI, Sarkar MdMR, Islam MdQ. DESIGN AND ANALYSIS OF A LOW COST SOLAR WATER PUMP FOR IRRIGATION IN BANGLADESH. J Mech Eng 2014;43:98–102. https://doi.org/10.3329/jme.v43i2.17833.
[45] CGWB. Aquifer Systems of India. CENTRAL GROUND WATER BOARD MINISTRY OF WATER RESOURCES GOVERNMENT OF INDIA; 2012.
[46] Case No. 6 of 2019, 'Petition of MSEDCL for removal of difficulties in implementation of MERC Regulations, 2014 in connection with releasing new connections and determination of compensation for Agriculture connection', Order, Maharashtra Electricity Regulatory Commission 2019.

[47] ESM. Economic Survey of Maharashtra 2017-18. Mumbai: Directorate of Economics and Statistics, Planning Department, Government of Maharashtra; 2018.
[48] Mohanty, B.B. T. Regional Disparity in Agricultural Development of Maharashtra. Economic & Political Weekly 2009;44:63–9.
[49] Bureau of Indian Standards. Indian Standards: Submersible Pumpsets - Specification (Third Revision) IS 8034:2018 2018.
[50] Technical specifications for Solar photovoltaic Water Pumping Systems for the year 2015-16, Ministry of New and Renewable Energy, Government of India 2015.
[51] Benchmark costs for offgrid solar PV systems and Grid Connected Rooftop Solar Power Plants for 2018-19 – reg., No. 318/38/2018-GCRT Ministry of New & Renewable Energy, Government of India 2018.
[52] Case No. 33 of 2019, 'Case of Maharashtra State Electricity Distribution Co. Ltd. for consideration of Deemed Generation on account of installation of Off-Grid Solar pump under various Solar agriculture pump Scheme towards RPO fulfilment'', Order, Maharashtra Electricity Regulatory Commission' 2019.
[53] Case No. 87 of 2019, 'Case of MSEDCL seeking approval for adoption of tariff for long term procurement of 1000 MW Solar Power for meeting the Solar Renewable Purchase Obligations', Order, Maharashtra Electricity Regulatory Commission 2019.
[54] Raghavan M. Reduction in losses through power factor improvement in agricultural feeders; MTech. Report, Centre for Technology Alternatives for Rural Areas; http://www.ctara.iitb.ac.in/en/mtech-project-reports-2013#overlay-context=en/academics/mtech-project-reports. 2015.
[55] Jharia P, Raj, Rahul. Energy Accounting and Auditing of Agriculture Feeder Karsul Village, Niphad Taluka, Nashik; Summer Field Stay Report, Centre for Technology Alternatives for Rural Area; http://www.ctara.iitb.ac.in/en/academics/summer-field-stay-may-june-2015. 2015.
[56] Detailed Tariff order with effect from 1st September 2018, Maharashtra State Electricity Distribution Co. Ltd. 2018.
[57] Harris Williams & Co. Transmission & Distribution Infrastructure. United States: 2014.
[58] World Bank. Inflation, consumer prices (annual %) - India n.d. https://data.worldbank.org/indicator/FP.CPI.TOTL.ZG?locations=IN.
[59] Zeyringer M, Pachauri S, Schmid E, Schmidt J, Worrell E, Morawetz UB. Analyzing grid extension and stand-alone photovoltaic systems for the cost-effective electrification of Kenya. Energy for Sustainable Development 2015;25:75–86. https://doi.org/10.1016/j.esd.2015.01.003.
[60] MITEi. Utility of the Future. Cambrdge, MA, USA: MIT Energy Initiative; 2016.
[61] Lazard. Lazard's Levelized Cost of Storage—Version 9.0. New York, NY: Lazard; 2015.
[62] Lazard. Lazard's Levelized Cost of Energy Analysis—Version 9.0. New York, NY: Lazard; 2015.
[63] NREL. 2016 Annual Technology Baseline, Discussion Draft. Golden, CO: National Renewable Energy Laboratory. 2016.
[64] Case No. 64 of 2019, 'Case of Maharashtra State Electricity Distribution Co. Ltd. seeking approval for adoption of Tariff discovered for Long Term Procurement of 1170 MW Solar Power under "Mukhyamantri Saur Krishi Vahini Yojana" for meeting the Solar Renewable Purchase Obligations', Order, Maharashtra Electricity Regulatory Commission 2019.
[65] Distributed Energy Resources Rate Design and Compensation. 1101 Vermont Avenue NW, Suite 200, Washington, D.C. 20005, U.S.A.: NARUC, The National Association of Regulatory Utility Commissioners; 2016.
[66] Kirsch LD, Morey MJ. Pricing Retail Electricity in a Distributed Energy Resources World. The Electricity Journal 2015;28:112–21. https://doi.org/10.1016/j.tej.2015.03.004.
[67] DES. ESTIMATES OF COST OF CULTIVATION/PRODUCTION & RELATED DATA 2015.
[68] Kumar D. Impact of electricity prices and volumetric water allocation on energy and groundwater demand management:: analysis from Western India. Energy Policy 2005;33:39–51. https://doi.org/10.1016/S0301-4215(03)00196-4.

[69] Kumar MD, Scott CA, Singh OP. Inducing the shift from flat-rate or free agricultural power to metered supply: Implications for groundwater depletion and power sector viability in India. Journal of Hydrology 2011;409:382–94. https://doi.org/10.1016/j.jhydrol.2011.08.033.
[70] Mukherji A, Das B, Majumdar N, Nayak NC, Sethi RR, Sharma BR. Metering of agricultural power supply in West Bengal, India: Who gains and who loses? Energy Policy 2009;37:5530–9. https://doi.org/10.1016/j.enpol.2009.08.051.
[71] Fishman R, Lall U, Modi V, Parekh N. Can Electricity Pricing Save India's Groundwater? Field Evidence from a Novel Policy Mechanism in Gujarat. Journal of the Association of Environmental and Resource Economists 2016;3:819–55. https://doi.org/10.1086/688496.
[72] Gulati A, Manchanda S, Kacker R. Harvesting Solar Power in India! INDIAN COUNCIL FOR RESEARCH ON INTERNATIONAL ECONOMIC RELATIONS; 2016.
[73] Dupraz C, Marrou H, Talbot G, Dufour L, Nogier A, Ferard Y. Combining solar photovoltaic panels and food crops for optimising land use: Towards new agrivoltaic schemes. Renewable Energy 2011;36:2725–32. https://doi.org/10.1016/j.renene.2011.03.005.
[74] Ravi S, Macknick J, Lobell D, Field C, Ganesan K, Jain R, et al. Colocation opportunities for large solar infrastructures and agriculture in drylands. Applied Energy 2016;165:383–92. https://doi.org/10.1016/j.apenergy.2015.12.078.
[75] Malu PR, Sharma US, Pearce JM. Agrivoltaic potential on grape farms in India. Sustainable Energy Technologies and Assessments 2017;23:104–10. https://doi.org/10.1016/j.seta.2017.08.004.
[76] Majumdar D, Pasqualetti MJ. Dual use of agricultural land: Introducing 'agrivoltaics' in Phoenix Metropolitan Statistical Area, USA. Landscape and Urban Planning 2018;170:150–68. https://doi.org/10.1016/j.landurbplan.2017.10.011.
[77] Central Electricity Authority, India. Carbon emissions from power sector in 2021-2022 and 2026-27 2018.
[78] Fraunhofer Institute for Solar Energy, Systems, ISE. Photovoltaics Report 2019.
[79] Kimmich C. Linking action situations: Coordination, conflicts, and evolution in electricity provision for irrigation in Andhra Pradesh, India. Ecological Economics 2013;90:150–8. https://doi.org/10.1016/j.ecolecon.2013.03.017.
[80] Shunglu Committee. High Level Panel on Financial Position of Distribution Utilities. New Delhi, India: 2011.

Appendix

A.1 Description of configurations

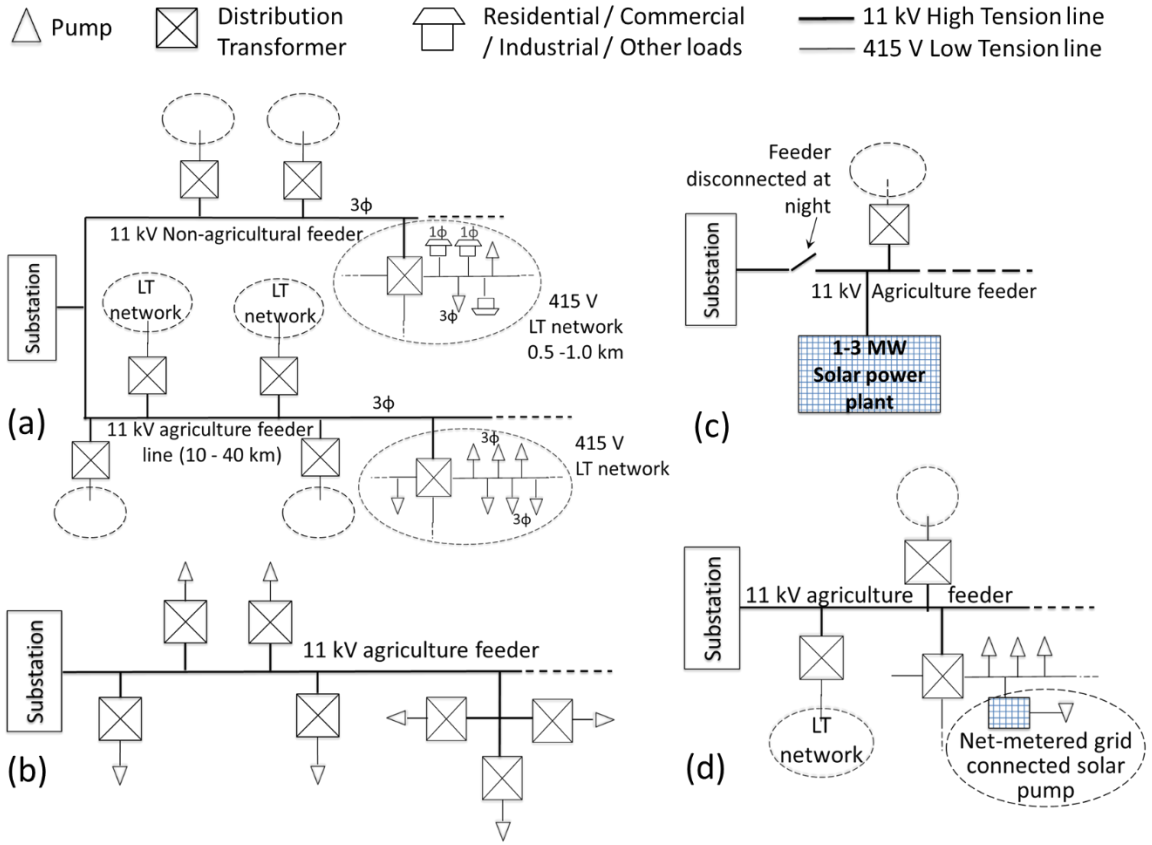

Figure 1 Schematics of (a) Ag feeder (b) HVDS (c) Solar Ag feeder (d) Net-metered solar pump

The current system of separated **Ag feeders** is shown in figure 1(a). Three phase High Tension conductors, carrying power at a line voltage of 11 kV, are called distribution feeders, and the substation that they emanate from is the last point of control for load shedding. The feeder may be ~10 to 40 km in total length, have ~12 to 45 Distribution Transformers (DT), and ~500 to 1000 pumps connected. A feeder can cover ~1 to 6 villages wholly or partially. Each DT steps down the voltage from 11 kV to 415 V. Low Tension (LT) lines of up to 0.5 to 1.0 km, carry power at 415 V from the DT to ~15 to 30 pumps.

The 11 kV HT conductors usually run along roads near farmland, while the LT lines snake through the farmland. In addition to the pumps, they may also supply to some of the homesteads if they are on the fields, through one of the phases. Three phase power is supplied for 8 hours a day, at night on 4 days of the week, and on the single phase going to homes for 24 hours. The consumption on the single phase is less than 10% on most feeders.

A **HVDS** system (fig. 1(b)) is different from the system described above only in that a DT is installed for each pump, very close to the pump. This ensures very short LT lines.

Solar Ag feeder is a novel configuration with a 1 to 3 MW solar PV plant connected to an Ag feeder at 11 kV (fig. 1(c)). The feeder, and hence power plant, stays connected to the grid in the daylight hours, and is disconnected from the grid once the solar plant stops generating power. Any excess power generated by the plant and unused by the feeder is fed back onto the grid.

Preprint of https://doi.org/10.1016/j.esd.2020.07.005

Net-metered SPV pumps are similar to a net-metered rooftop system, with pumps connected to the Ag feeder (fig. 1(d)). The solar panel generates energy in the daytime. The energy is used to run the pump or is fed back to the Ag feeder if the pump is turned off. The Ag feeder needs to be energized in the daytime in this configuration.

Offgrid SPV pumps, are pumps connected to an appropriately sized set of solar PV panels through some electronics supplying AC or DC power to the pump.

A.2 Calculation of infrastructure, operations and maintenance and energy costs

Capital infrastructure costs

The cost of $1449 per connection for the Ag feeders is the average cost incurred for 594,000 new connections in Maharashtra from 2013 to 2018 [1]. The government has set a condition of allowing HVDS connections only in cases that the cost can be limited to $3623, while allowing up to 3 consumers per DT [2]. A first principles costing based on two sample feeders in the districts of Sangli and Nasik [3,4], using proposed cost data for components of MSEDCL from 2016-17, resulted in a cost 25% lower than $1449 for Ag feeders, and ~$3623 for HVDS with one consumer per DT. We use the $1449 and $3623 respectively. But it should be noted that the final cost of HVDS implementation could be higher.

For the Solar Ag feeder case, we consider the infrastructure cost only for the distribution infrastructure, which is the same as Ag feeders. The solar PV plant cost is left out of the calculation, and instead we consider the cost of the energy supplied by the plant.

The solar PV offgrid pumps costs considered are MNRE benchmark costs for pumps higher than 3 HP [5], and are commensurate with current market costs. The 1 – 2 HP have a higher market cost and have not been distributed in any government scheme. Hence we use the market cost for these pumps.

The net-metered solar pumps have a very high cost in current implementations [6], but these costs can be expected to have economy of scale, and hence we consider a quantum above offgrid pumps for the inverter.

Operational costs

The average operational expense per consumer incurred by MSEDCL has been considered for all grid connected systems [7]. For the offgrid pumps, we have assumed an annual maintenance cost of 1% of the capital cost.

Energy costs

The APPC, or the cost of energy to the DISCOM, has been considered as the energy cost for the Solar Ag feeders configuration, and for the day time supply configuration of Ag feeders and HVDS.

The energy cost for the solar Ag feeders is considered equal to the APPC for the distribution company, since any grid connected solar plant supplying to the state would be a part of this APPC.

For the mixed day and night supply in case of Ag feeders and HVDS, we consider a reduced cost. While power purchase costs for distribution companies are not sensitive to the time of day, the ability to supply power during periods of high demand is strained. This is reflected in the Time-of-Day tariffs for consumers listed in Table 4. This is the reason that all agricultural feeders are given night time supply for 4 days out of 7. We calculate a weighted average of the power cost by considering night time costs as reduced by 2.17 ¢ / kWh.

Preprint of https://doi.org/10.1016/j.esd.2020.07.005

Table 4. Time of Day charges for Industrial, Commercial, Public Water Works and Public Services, consumers [8]

Time slot	Change in Tariff (₵/kWh)
10 pm to 6 am	-2.17
6 to 9 am & 12 noon to 6 pm	0.00
9 am to 12 noon	1.16
6 pm to 10 pm	2.17

For the net-metered solar pumps, we have considered the feed-in tariff for Solar PV plants adopted by the MERC, 3.97 ₵ / kWh [9].

References

[1] Case No. 6 of 2019, 'Petition of MSEDCL for removal of difficulties in implementation of MERC Regulations, 2014 in connection with releasing new connections and determination of compensation for Agriculture connection', Order, Maharashtra Electricity Regulatory Commission 2019.

[2] Case No. 33 of 2019, 'Case of Maharashtra State Electricity Distribution Co. Ltd. for consideration of Deemed Generation on account of installation of Off-Grid Solar pump under various Solar agriculture pump Scheme towards RPO fulfilment'', Order, Maharashtra Electricity Regulatory Commission' 2019.

[3] Raghavan M. Reduction in losses through power factor improvement in agricultural feeders; MTech. Report, Centre for Technology Alternatives for Rural Areas; http://www.ctara.iitb.ac.in/en/mtech-project-reports-2013#overlay-context=en/academics/mtech-project-reports. 2015.

[4] Jharia P, Raj, Rahul. Energy Accounting and Auditing of Agriculture Feeder Karsul Village, Niphad Taluka, Nashik; Summer Field Stay Report, Centre for Technology Alternatives for Rural Area; http://www.ctara.iitb.ac.in/en/academics/summer-field-stay-may-june-2015. 2015.

[5] Benchmark costs for offgrid solar PV systems and Grid Connected Rooftop Solar Power Plants for 2018-19 – reg., No. 318/38/2018-GCRT Ministry of New & Renewable Energy, Government of India 2018.

[6] Shah T, Durga, Neha, Prakash Rai, Gyan, Verma, Shilp, Rathod, Rahul. Promoting Solar Power as a Remunerative Crop. Economic & Political Weekly 2017;L11:14–9. https://doi.org/10.1016/j.agwat.2008.04.006.

[7] Case No. 195 of 2017, 'Revised Projections of Aggregate Revenue Requirement (ARR) for 2019-20', Order, Maharashtra Electricity Regulatory Commission 2018.

[8] Detailed Tariff order with effect from 1st September 2018, Maharashtra State Electricity Distribution Co. Ltd. 2018.

[9] Case No. 87 of 2019, 'Case of MSEDCL seeking approval for adoption of tariff for long term procurement of 1000 MW Solar Power for meeting the Solar Renewable Purchase Obligations', Order, Maharashtra Electricity Regulatory Commission 2019.